No.	NOM	DESCRIPTION	QTE
2	TOPSECTIONU		1
2	COLM3X10IN5.4		20
3	CLS-M4-2		14

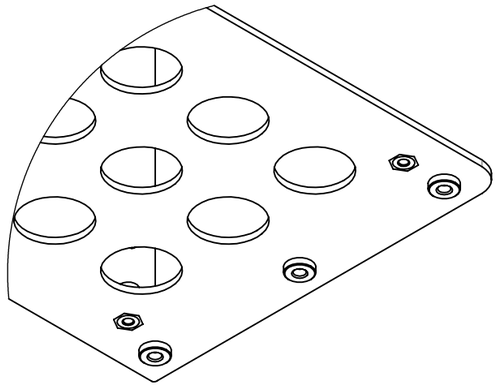

DÉTAIL A
ECHELLE 2 : 3

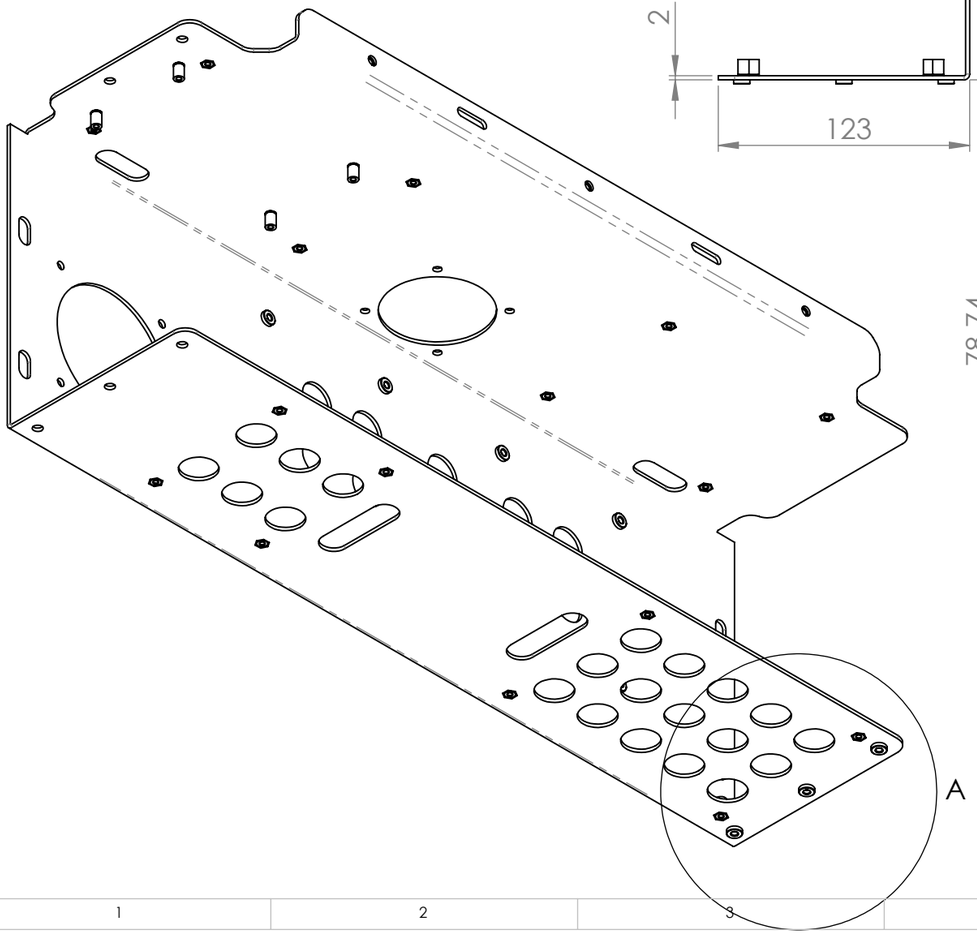

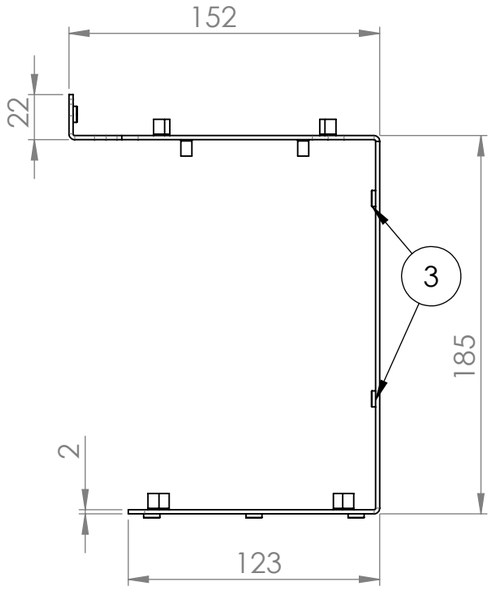

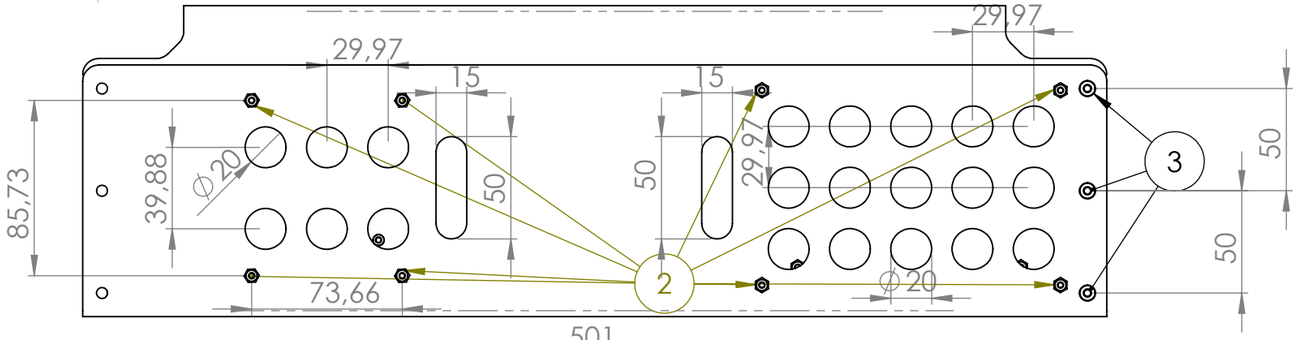

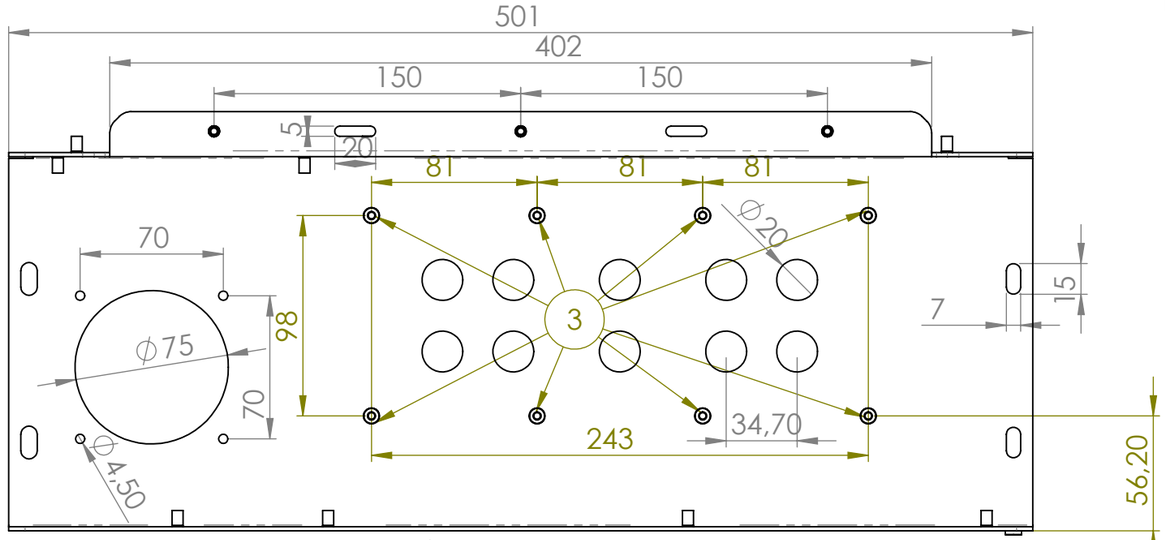

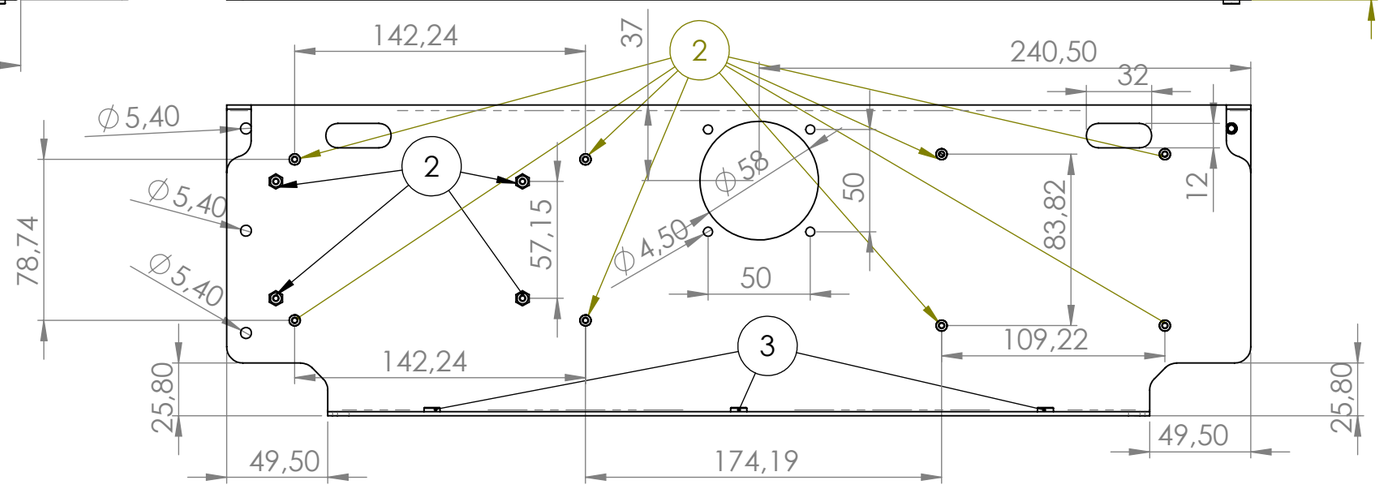

UNLESS OTHERWISE SPECIFIED:
DIMENSIONS ARE IN MILLIMETERS
SURFACE FINISH:
TOLERANCES: ISO2768MK
LINEAR:
ANGULAR:

FINISH: SURTEC 650

DEBUR AND BREAK SHARP EDGES

DO NOT SCALE DRAWING

REVISION B

	NAME	SIGNATURE	DATE
DRAWN			
CHK'D			
APPV'D			
MFG			
Q.A			

MATERIAL: 5754H111-2MM

WEIGHT:

TITLE:

DWG NO. TOPSECTIONU

A3

SCALE:1:3

SHEET 1 OF 1