No.	NOM	DESCRIPTION	QTE
2	TOPSECTIONU		1
2	CLSM3-2-		14
3	CLS-M4-2		10

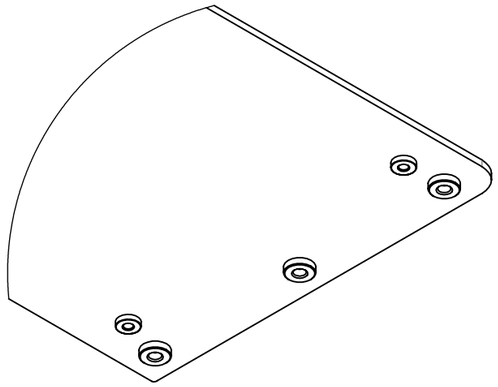

DÉTAIL A
ECHELLE 2 : 3

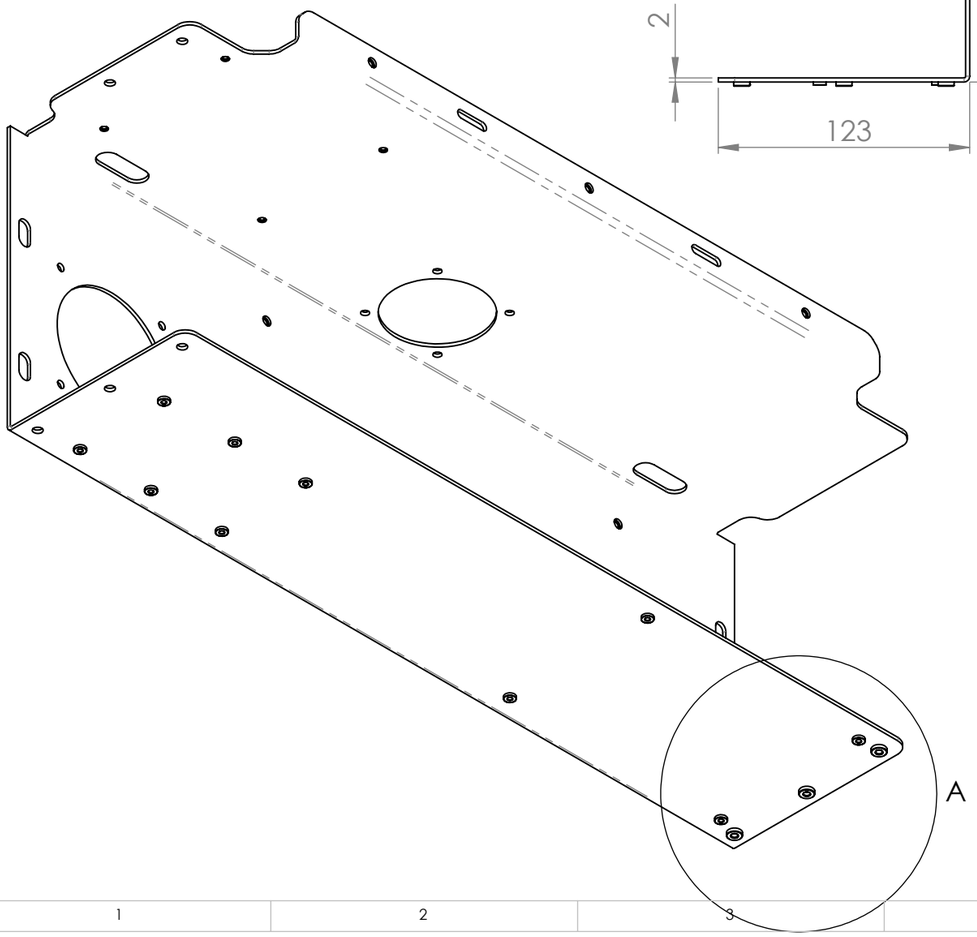

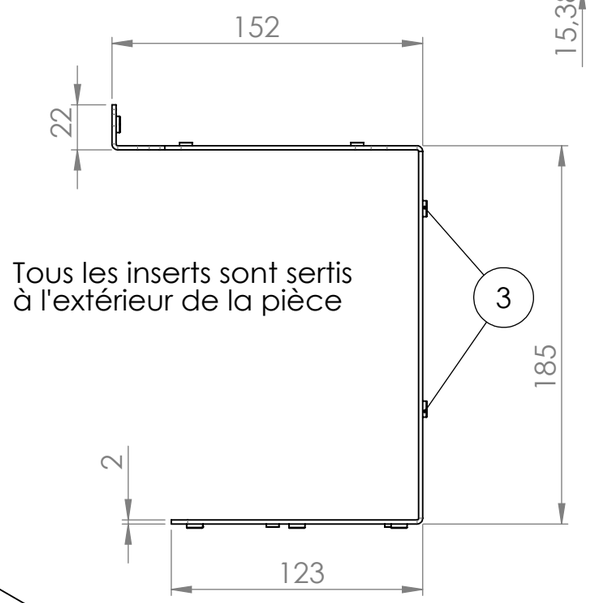

Tous les inserts sont sertis
à l'extérieur de la pièce

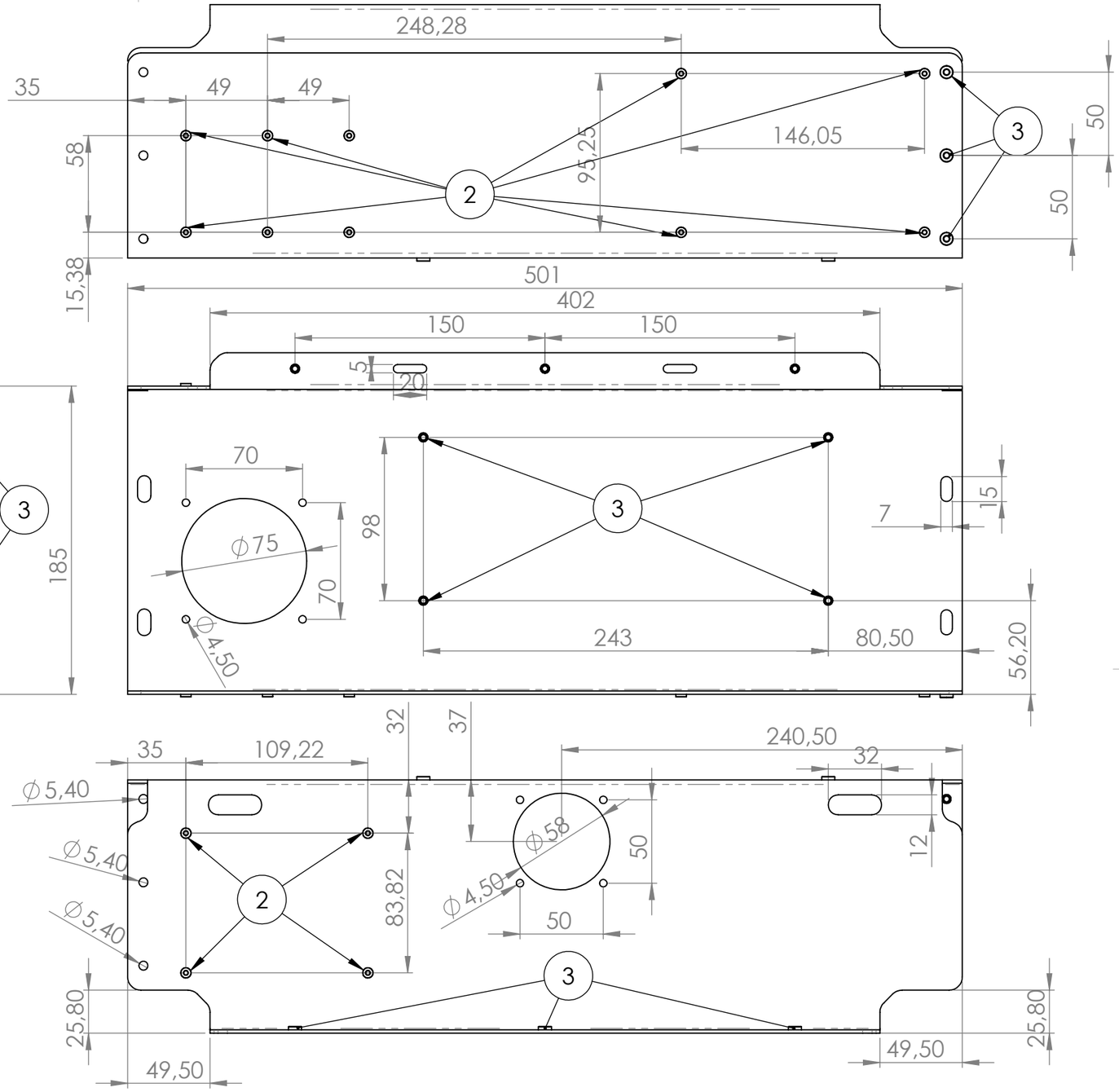

UNLESS OTHERWISE SPECIFIED: DIMENSIONS ARE IN MILLIMETERS SURFACE FINISH: TOLERANCES: ISO2768MK LINEAR: ANGULAR:	FINISH: ALODINE 1200			DEBUR AND BREAK SHARP EDGES	DO NOT SCALE DRAWING	REVISION C
	NAME	SIGNATURE	DATE		TITLE:	
DRAWN						
CHK'D						
APPV'D						
MFG						
Q.A				MATERIAL: 5754H111-2MM	DWG NO. TOPSECTIONU	A3
				WEIGHT:	SCALE:1:3	SHEET 1 OF 1